QualRivu

// PHONE EDITION

Sample Reviewed Drawing Set

An AI pass over three sheets of a fictional municipal servicing set.

QualRivu read the set against a municipal design standard and recorded 85 checks - violations and passing confirmations alike. The drawings come first, every pin numbered; the findings follow, numbered to match. Zoom into a sheet to see where a finding sits.

This is a rough audit.

The notes are the AI pass alone. They have not been verified by a licensed engineer, and the drawings are a fictional sample rather than a real project. In a live review every finding is checked, accepted, rejected or discussed by the reviewer, who holds the determination.

3 sheets · 85 checks · every one cited to a clause

qualrivu.ai

DRAFT - FOR INTERNAL USE
2026-09-10

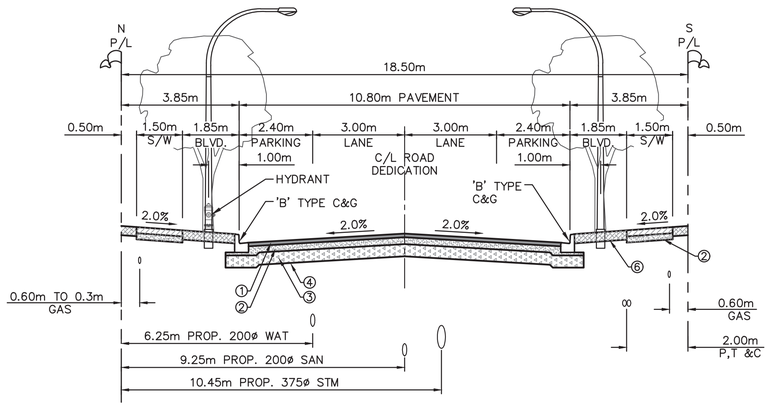

"B" AVENUE TYPICAL CROSS SECTION
N.T.S.

ROAD STRUCTURE: "B" AVENUE

1. 35mm OF UPPER COURSE#2 ASPHALT
   50mm OF LOWER COURSE#2 ASPHALT
2. 100mm OF 19mm MINUS CRUSHED GRAVEL GRANULAR BASE COURSE
3. 200mm OF 75mm MINUS PIT RUN SAND AND GRAVEL GRANULAR SUB-BASE COURSE
4. APPROVED SUBGRADE COMPACTED TO NOT LESS THAN 95% MPMDD AS PER THE GEOTECHNICAL REPORT
5. 100mm CONCRETE SIDEWALK
6. MINIMUM 150mm TOPSOIL AND SOD BOULEVARD

SOILS REPORT

_____

DATE _____

BY _____

WATERMAIN NOTES:

1. TIE-IN TO BE COMPLETED BY TOWNSHIP OF ALLEGAN FORCES AT OWNER'S COST,
2. ONSITE WATER SYSTEM TO PASS PRESSURE AND BACTERIOLOGICAL TESTING BEFORE CONNECTION IS MADE TO EXISTING WATER SYSTEM.
3. NEW WATERMAIN TO BE INSTALLED TO WITHIN 2.0m OF EXISTING WATERMAIN AT CONNECTION LOCATION.
4. CONTRACTOR TO ENSURE NEW WATERMAIN ELEVATION MATCHES EXISTING WATERMAIN ELEVATION AT CONNECTION LOCATION.
5. CONTRACTOR TO EXPOSE AND CONFIRM ELEVATION AND OFFSET OF ALL UTILITIES BETWEEN NEW WATERMAIN AND EXISTING WATERMAIN AT CONNECTION LOCATION.
6. NO THRUST BLOCKS BETWEEN NEW WATERMAIN AND EXISTING WATERMAIN AT CONNECTION LOCATION. ROD AND RESTRAIN AND/OR USE REVERSE THRUST BLOCKS.
7. NEW HYDRANT SERVICED BY TOWNSHIP OF ALLEGAN AT OWNER'S EXPENSE.
8. NO THRUST BLOCK BEHIND BLOW-OFFS, HYDRANT AND STUBS FOR FUTURE USE. ROD & RESTRAIN AND/OR USE REVERSE THRUST BLOCK.
9. USE CERTANTEED COUPLINGS FOR ALL BENDS LESS THAN 3°.

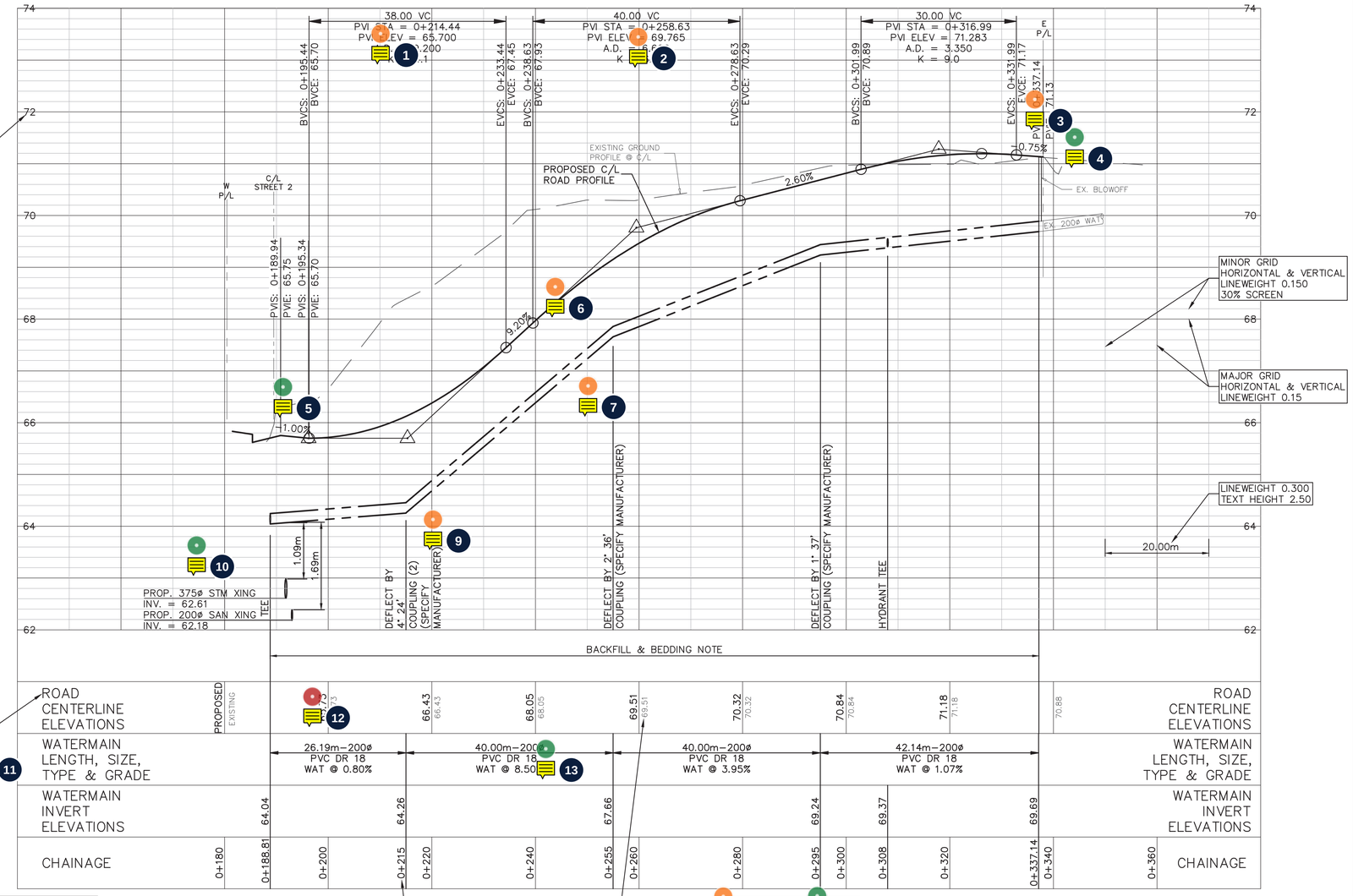

CURB RETURN TABLE														
SEGMENT	BC STA.	BC O/S	EC STA.	EC O/S	LENGTH	RADIUS	DELTA	TANGENT	CHORD	BC ELEV	¼ ELEV	½ ELEV	¾ ELEV	EC ELEV
C1	3+094.29	5.40 R	0+204.31	5.40 L	14.12	9.00	89°53'24"	8.98	12.72	65.15	65.43	65.57	65.47	65.57
C2	3+064.69	5.40 R	0+204.48	5.40 R	14.65	9.00	93°17'46"	9.53	13.09	66.29	66.23	66.16	65.69	65.61

RIVER SAND SHALL NOT BE APPROVED FOR USE WITHIN THE TOWNSHIP OF ALLEGAN DEDICATIONS OR RIGHT OF WAYS

MUNICIPAL PROJECT No. xx–xx–xxxx

NOTES

CONTRACTOR TO CONTACT TELUS, BC HYDRO, FORTISBC AND BC ONE CALL PRIOR TO CONSTRUCTION TO CONFIRM LOCATIONS OF UTILITIES AND APPURTENANCES REQUIRING ADJUSTMENT.

BENCHMARK: XYZ

LEGAL: XYZ

OWNER: XYZ
XYZ
LOGO

OWNER'S ENGINEER: XYZ
XYZ
LOGO

SEAL

I_____, PROFESSIONAL ENGINEER, IN GOOD STANDING IN AND FOR THE PROVINCE OF BRITISH COLUMBIA, HEREBY CERTIFY THAT THE WORKS IN HEREIN SET OUT ON THE ATTACHED DRAWINGS HAVE BEEN DESIGNED TO GOOD ENGINEERING PRACTICE AND IN COMPLIANCE WITH THE TOWNSHIP OF ALLEGAN SUBDIVISION AND DEVELOPMENT CONTROL BYLAW, EXCEPT AS NOTED BELOW.

EXCEPTIONS: _____

No	Date	REVISIONS

PLAN & PROFILE

DESIGN BY: XYZ
DRAWN: XYZ
APPROVED:
DATE: XYZ
SCALE: HORIZ. 1:500 VERT. 1:50

ROADWORKS AND WATERWORKS
"B" AVENUE EAST OF STREET 2
ADDRESS (TYP.)

DESIGN FILE No
PLAN No XYZ-
AS BUILT No. XYZ-
SHEET NO. of XX
REV. .

DRAFT - FOR INTERNAL USE
2026-09-10

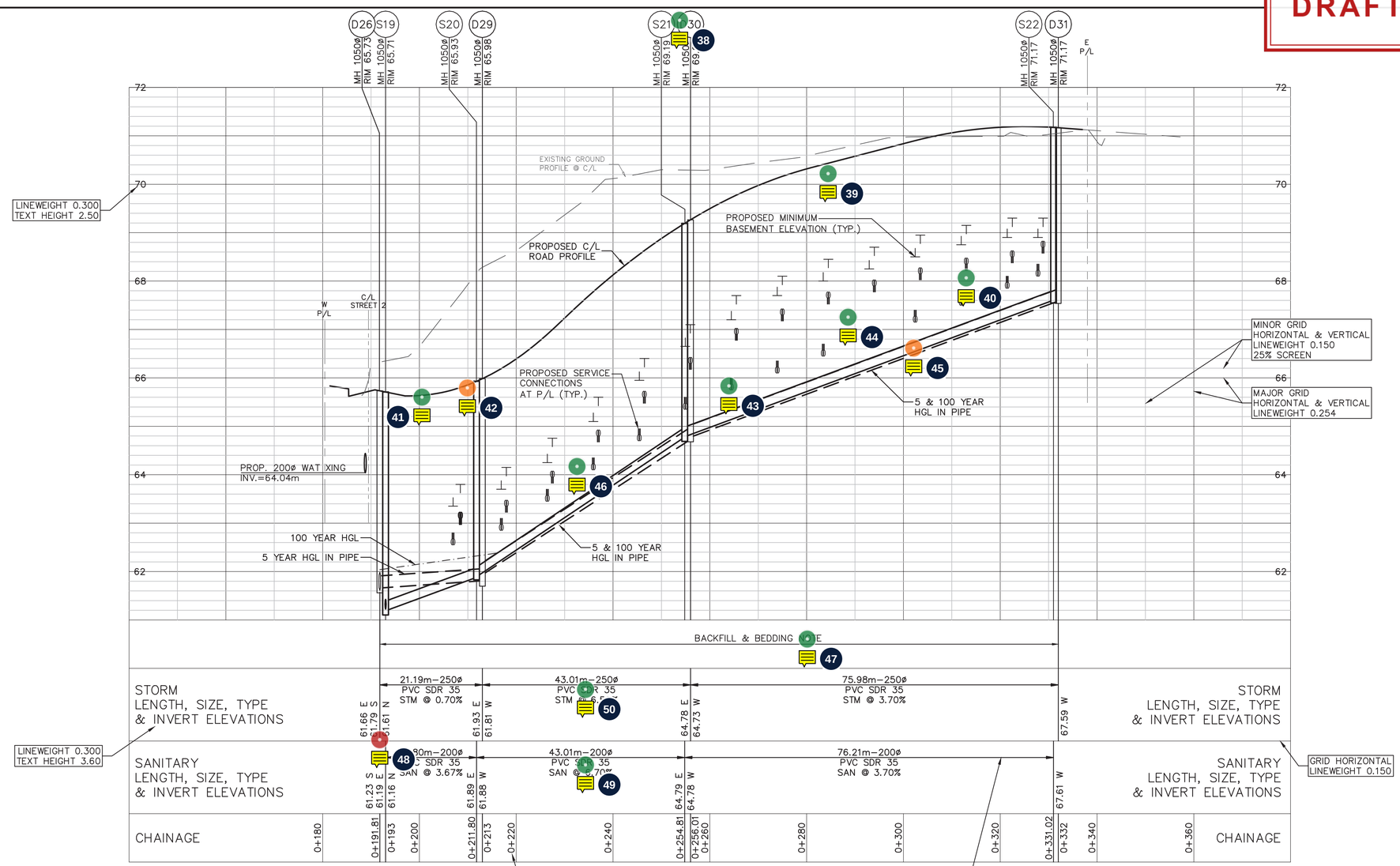

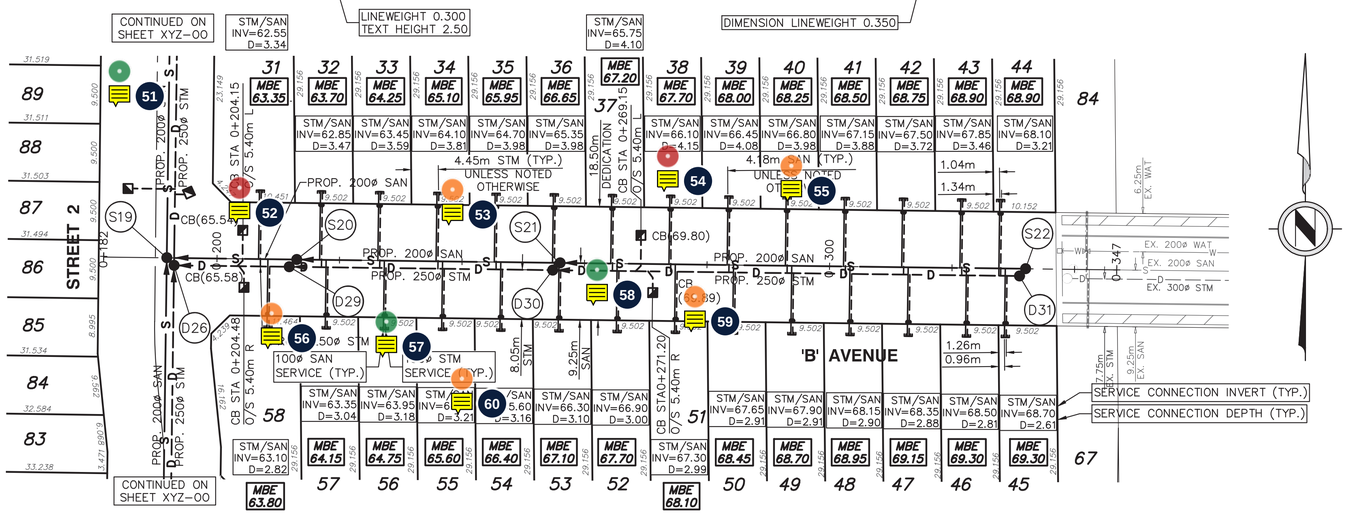

RIVER SAND SHALL NOT BE APPROVED FOR USE WITHIN THE TOWNSHIP OF ALLEGAN DEDICATIONS OR RIGHT OF WAYS

MUNICIPAL PROJECT No. xx–xx–xxxx

NOTES		OWNER	OWNER'S ENGINEER	SEAL		No	Date	REVISIONS	PLAN & PROFILE
CONTRACTOR TO CONTACT TELUS, BC HYDRO, FORTISBC AND BC ONE CALL PRIOR TO CONSTRUCTION TO CONFIRM LOCATIONS OF UTILITIES AND APPURTENANCES REQUIRING ADJUSTMENT.	LEGAL BENCHMARK XYZ	XYZ XYZ LOGO	XYZ XYZ LOGO		I_____, PROFESSIONAL ENGINEER, IN GOOD STANDING IN AND FOR THE PROVINCE OF BRITISH COLUMBIA, HEREBY CERTIFY THAT THE WORKS IN HEREIN SET OUT ON THE ATTACHED DRAWINGS HAVE BEEN DESIGNED TO GOOD ENGINEERING PRACTICE AND IN COMPLIANCE WITH THE TOWNSHIP OF ALLEGAN SUBDIVISION AND DEVELOPMENT CONTROL BYLAW, EXCEPT AS NOTED BELOW. EXCEPTIONS: _____				DESIGN BY: XYZ DRAWN BY: XYZ APPROVED BY: XYZ DATE: XYZ SCALE: HORIZ. 1:500 VERT. 1:50

SANITARY AND STORM SEWER
"B" AVENUE EAST OF STREET 2
ADDRESS (TYP.)

DESIGN FILE No	PLAN No XYZ-	
AS BUILT No. XYZ-	SHEET NO. of XX	REV. .

DRAFT - FOR INTERNAL USE
2026-09-10

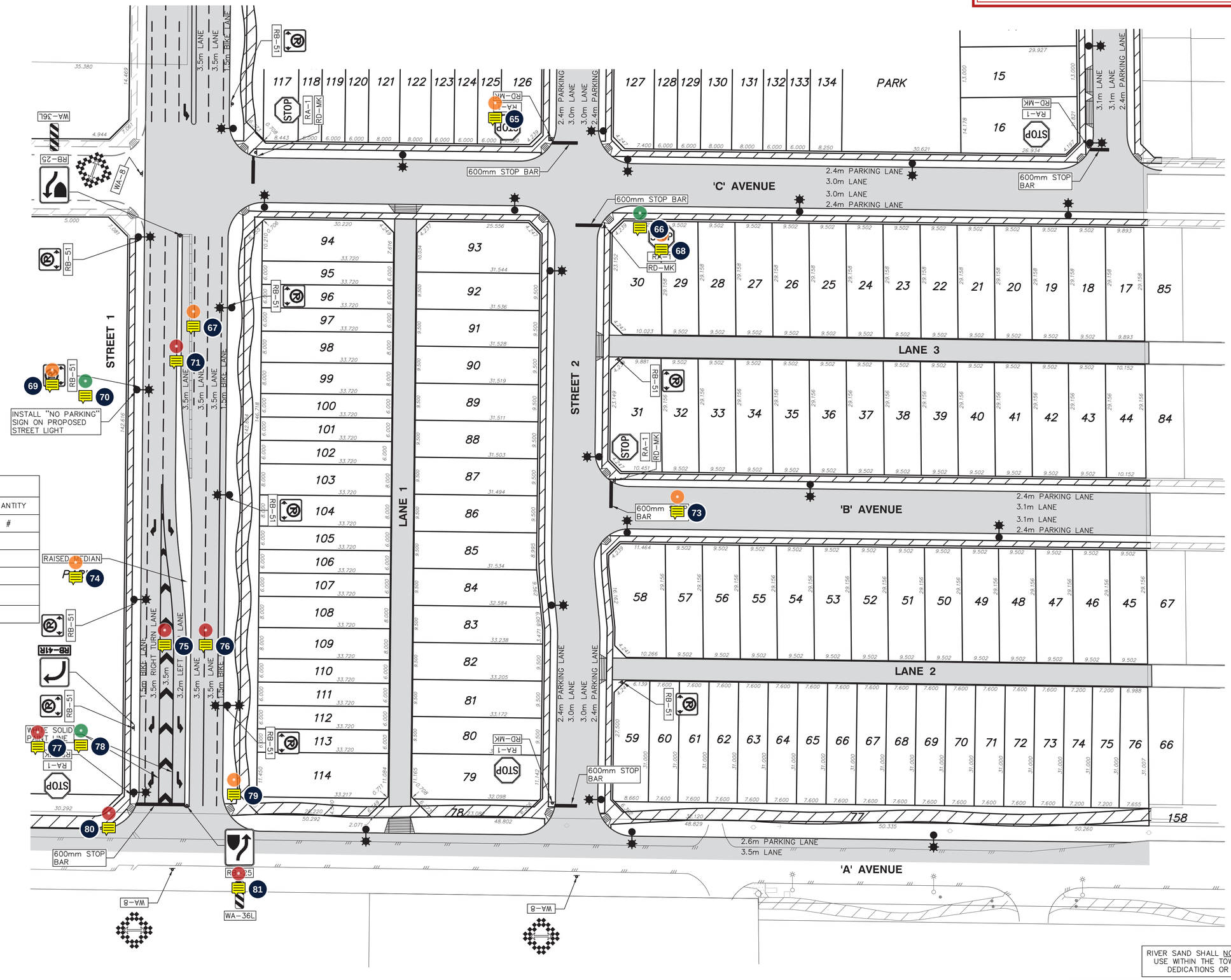

SIGN SCHEDULE		
SIGN TYPE	#	QUANTITY
SIGN # "DESCRIPTION"		#

RIVER SAND SHALL NOT BE APPROVED FOR USE WITHIN THE TOWNSHIP OF ALLEGAN DEDICATIONS OR RIGHT OF WAYS

MUNICIPAL PROJECT No. xx-xx-xxxx

NOTES

CONTRACTOR TO CONTACT TELUS, BC HYDRO, FORTISBC AND BC ONE CALL PRIOR TO CONSTRUCTION TO CONFIRM LOCATIONS OF UTILITIES AND APPURTENANCES REQUIRING ADJUSTMENT.

BENCHMARK

LEGAL XYZ

OWNER
XYZ
XYZ
LOGO

OWNER'S ENGINEER
XYZ
XYZ
LOGO

SEAL

I_____, PROFESSIONAL ENGINEER, IN GOOD STANDING IN AND FOR THE PROVINCE OF BRITISH COLUMBIA, HEREBY CERTIFY THAT THE WORKS IN HEREIN SET OUT ON THE ATTACHED DRAWINGS HAVE BEEN DESIGNED TO GOOD ENGINEERING PRACTICE AND IN COMPLIANCE WITH THE TOWNSHIP OF ALLEGAN SUBDIVISION AND DEVELOPMENT CONTROL BYLAW, EXCEPT AS NOTED BELOW.

EXCEPTIONS: _____

No	Date	REVISIONS

PLAN

DESIGN BY: XYZ
DRAWN BY: XYZ
APPROVED BY: XYZ
DATE: XYZ
SCALE: HORIZ. 1:500 VERT. N/A

PAVEMENT MARKING AND SIGNAGE PLAN
ADDRESS

DESIGN FILE No	PLAN No XYZ-
AS BUILT No. XYZ-	SHEET NO. of XX
	REV. .

Findings list

85 checks across 3 sheets, violations and passing confirmations alike. Each number matches a numbered pin on the drawings before this list. This is a rough audit: the AI pass alone, not verified by a licensed engineer.

SHEET 1 OF 3 · 37 CHECKS

Roadworks and Waterworks, 'B' Avenue east of Street 2

1 Sag Vertical Curve Rate of Vertical Curvature (K-Value)

Ref: 8.7.3.3

Finding: The sag vertical curve VC 1 at PVI 0+214.44 has an algebraic difference A.D. = 9.20% and length L = 38.00m, resulting in K = 4.1. Section 8.7.3.3 specifies an equivalent K-value of 4 for maximum grade changes outside intersections; headlight sight distance should be confirmed for 50 km/h design speed.

Action: Review sag curve K-value (K=4.1) against TAC Geometric Design Guide headlight sight distance requirements for urban local roadways per Section 8.7.3.3.

2 Curve Design Verification

Ref: General

Finding: The active standard defers curve minimums to TAC, so no deterministic verdict is issued. Verify the following against the TAC tables for the road's design speed (road class could not be resolved from the sheet — confirm it first): 0+195.44 to 0+233.44: K=4.1; 0+238.63 to 0+278.63: K=6.1; 0+301.99 to 0+331.99: K=9.

Action: Check each listed K / radius against the TAC minimum for the governing design speed.

3 Combination Air Release Valve at Profile Summit

Ref: 3.4.5

Finding: The watermain profile rises over 5.6m to a summit invert of 69.69m near station 0+337.14 without providing a combination air release valve. Section 3.4.5 requires combination air valves at high points of mains 200mm diameter and larger where air pockets can accumulate.

Action: Review hydraulic profile with the City Engineer to determine if a 25mm combination air valve is required at the profile summit in accordance with Section 3.4.5.

4 Water Pipe Cover

Ref: 3.4.2.6

Finding: All 4 water pipe segments meet the 0.75m minimum cover in the below segments.
• TEE to COUPLING: 1.51m
• COUPLING to COUPLING: 1.285m
• COUPLING to COUPLING: 1.27m
• COUPLING to TIE-IN: 1.033m
NOTE: this standard sets road-class-dependent cover minimums; the check uses the LOWEST (0.75m) — verify the road class for any segment near the threshold, as a higher-class road may require more.

Action: Cover meets the 0.75m minimum requirement.

5 Roadway Longitudinal Grade - Minimum Grade Compliance

Ref: 8.7.3.3

Finding: Longitudinal roadway grades along B Avenue (-1.00%, +9.20%, +2.60%, -0.75%) all exceed the minimum required 0.5% longitudinal grade for streets with concrete gutters established in Section 8.7.3.3.

Action: Maintain longitudinal grades >= 0.5% to ensure positive gutter drainage per Section 8.7.3.3.

6 Roadway Longitudinal Grade - Steep Tangent

Ref: 8.7.3.3

Finding: The roadway longitudinal tangent grade between EVCS 0+233.44 and BVCS 0+238.63 is 9.20%. While within the absolute maximum of 10% for streets with concrete gutters under Section 8.7.3.3, it significantly exceeds the preferred maximum grade of 1.5%.

Action: Verify that the 9.20% roadway grade meets municipal accessibility and operational criteria, or flatten vertical alignment if site topography permits per Section 8.7.3.3.

7 Joint Restraint Coverage

Ref: General

Finding: This sheet shows 5 watermain fittings but NO joint restraint or thrust block table was found anywhere in the set, so neither a restrained length nor a block size is stated for any of them. This is NOT a compliant verdict.

- 200mm tee at 0+188.81
- 200mm bend at 0+215
- 200mm bend at 0+255
- 200mm bend at 0+295
- 200mm tee at 0+308

Action: Provide a joint restraint table or thrust block schedule covering every fitting size and deflection used, or point to the standard drawing that does.

8 Roadway Functional Classification & Cross Section Hierarchy

Ref: 8.2.1

Finding: B Avenue is designed as a residential local street with an 18.5m right-of-way, 10.8m pavement width (two 3.0m travel lanes and two 2.4m parking lanes), and detached sidewalks on both sides, adhering to Section 8.2.1 and Section 8.2.3 urban local street standards.

Action: Maintain context-sensitive residential local street cross section conforming to Section 8.2.3.

9 Water Main Deflection Couplings / Bends Restraint

Ref: 2.4.8

Finding: Watermain vertical deflection couplings at stations 0+215 (4°24'), 0+255 (2°36'), and 0+295 (1°37') indicate '(SPECIFY MANUFACTURER)' and Note 9 specifies CertainTeed couplings for bends under 3 degrees, but joint restraint lengths and thrust restraint details are omitted contrary to Section 2.4.8.

Action: Size, label, and dimension joint restraints from adjacent fittings showing the restrained length in accordance with Section 2.4.8.

10 Vertical Clearance - Utility Crossings

Ref: 2.2.5

Finding: At station 0+188.81, proposed 200mm watermain crosses over proposed 375mm storm main with 1.09m vertical clearance, and crosses over proposed 200mm sanitary sewer main with 1.69m vertical clearance. Both crossings exceed the minimum vertical clearance requirement of 0.45m above sewers per Section 2.2.5.

Action: Maintain proposed vertical clearances (1.09m to storm, 1.69m to sanitary) exceeding the 0.45m minimum vertical clearance requirement per Section 2.2.5.

11 Horizontal Separation Not Checked

Ref: General

Finding: Utility separation could not be checked on this sheet: this sheet has no scale calibration, so drawing distances cannot be converted to metres. This is NOT a compliant verdict — no separation was measured here, so any conflict on this sheet is unreported.

Action: Calibrate this sheet (or add a scale note), then re-run the audit.

12 Water Main Material - PVC vs Ductile Iron

Ref: 3.4.2.2

Finding: The proposed 200mm watermain is specified as PVC DR 18 pipe. Section 3.4.2.2 requires distribution mains to be ductile iron with a minimum 200mm diameter, and Section 3.5.3 specifies ductile iron pipe for distribution mains.

Action: Revise distribution main pipe specification from PVC DR 18 to Ductile Iron conforming to Section 3.4.2.2 and Section 3.5.3.

13 Water Main Distribution Diameter Compliance

Ref: 3.4.2.2

Finding: The proposed watermain along B Avenue is designed with a 200mm internal diameter, complying with the minimum 200mm diameter requirement for municipal distribution mains under Section 3.4.2.2.

Action: Maintain proposed 200mm pipe diameter in accordance with Section 3.4.2.2.

14 General Note: Survey Control & Monument Protection

Ref: 2.3.5.6

Finding: General notes on the drawing do not include mandatory notification of the Land Survey Branch prior to construction or monitoring procedures for integrated survey monuments within 2.0m radius as required by Section 2.3.5.6.

Action: Add mandatory survey control note requiring Land Survey Branch notification prior to construction at or near any integrated survey monument per Section 2.3.5.6.

15 Drafting: Waterworks Restraint and Thrust Block Details

Ref: 2.4.8

Finding: Thrust blocks and joint restraints are indicated by text labels ('c/w THRUST BLOCK') but are not sized, shaded, labelled, or dimensioned from adjacent fittings showing the length requiring restraint as required by Section 2.4.8.

Action: Size, shade, label, and dimension joint restraints and thrust blocks on plan and profile views showing restrained lengths per Section 2.4.8.

16 Water Main Thrust Block Detailing at Tees

Ref: 2.4.8

Finding: Mainline tee at station 0+188.81 (Street 2) and hydrant tee at station 0+308 call for 'c/w THRUST BLOCK' but omit required thrust block dimensions, bearing area calculations, and shading per Section 2.4.8.

Action: Provide engineered thrust block dimensions, concrete bearing area details, and shading or specify mechanical joint restraint lengths conforming to Section 2.4.8.

17 Fire Hydrant Connection Sizing Compliance

Ref: 3.4.2.2

Finding: The hydrant lead at station 0+308 is designed with a 150mm diameter lead and 150mm gate valve, complying with the minimum 150mm diameter requirement for fire hydrant connections per Section 3.4.2.2.

Action: Maintain proposed 150mm diameter hydrant connection in accordance with Section 3.4.2.2.

18 Terminal Blow-Off Flushing Facility Compliance

Ref: 3.4.8

Finding: Detail #1 provides a temporary blowoff assembly for testing and flushing prior to tie-in at the dead end connection point, complying with Section 3.4.8 requirement for blowoffs at terminal ends of distribution mains.

Action: Install temporary blow-off assembly designed to achieve minimum 0.8 m/s flushing velocity per Section 3.4.8.

19 Lane Width Meets Standard Minimum

Ref: 8.7.3.1

Finding: Sheet 6's 3m lane width (printed on this sheet; 0+189.94 to 0+195.44, 0+195.44 to 0+233.44, 0+233.44 to 0+238.63, 0+238.63 to 0+278.63, 0+278.63 to 0+301.99, 0+301.99 to 0+331.99) meets the 2.7m minimum in §8.7.3.1 ("Roadway Lane Widths"). The standard states road-class-dependent minimums; the check uses the LOWEST — a higher-class road may require more.

Action: No action needed — the lane width meets the resolved minimum.

20 Road Crossfall

Ref: 8.7.3.4

Finding: All 7 crossfall value(s) (gutter to CL offset of 5.40m) meet the 2% standard (maximum 5%) in the below segments (each judged at its worst station):

- 0+189.94 to 0+195.44: 2.0% — printed on the sheet
- 0+195.44 to 0+233.44: 2.0% — printed on the sheet
- 0+233.44 to 0+238.63: 2.0% — printed on the sheet
- 0+238.63 to 0+278.63: 2.0% — printed on the sheet
- 0+278.63 to 0+301.99: 2.0% — printed on the sheet
- 0+301.99 to 0+331.99: 2.0% — printed on the sheet
- 0+331.99 to 0+337.14: 2.0% — printed on the sheet

Action: Crossfall meets the stated standard.

21 Single Diagonal Curb Ramp at Street 2 Intersection

Ref: 8.8.1.1

Finding: Single diagonal curb ramps are shown at curb returns C1 and C2 at the intersection of B Avenue and Street 2. Section 8.8.1.1 specifies double curb ramps per corner as standard (Standard Detail Drawing C8.1) and requires City Engineer approval for single diagonal ramps.

Action: Provide double directional curb ramps per corner per Standard Detail Drawing C8.1, or obtain City Engineer approval for single diagonal ramps under Section 8.8.1.1.

22 Sidewalk Width

Ref: 8.4.3.1

Finding: All 2 sidewalk segment(s) meet the 1.5m minimum.

- North sidewalk along 'B' Avenue (0+188 to 0+347): 1.5m (width from this sheet's typical cross-section)
- South sidewalk along 'B' Avenue (0+188 to 0+347): 1.5m (width from this sheet's typical cross-section)

NOTE: the standard states more than one width — the check uses the SMALLEST (1.5m), below which the path fails regardless of class. Verify the applicable class for anything near the threshold.

This supersedes 4 model finding(s) on this path's section-governed dimensions — judged above.

Action: Sidewalk width meets the 1.5m requirement.

23 Curb and Gutter Type Specification Approval

Ref: 8.7.4

Finding: Curbs are specified as "B' TYPE C&G AS PER MMCD DWG C4'. Section 8.7.4 indicates Type B shallow-depth barrier curb and gutter requires specific City approval, with Type A standard barrier curb and gutter (0.15m face) being standard for motor vehicle separation.

Action: Confirm City Engineer approval for Type B shallow-depth barrier curb and gutter or revise to standard Type A curb per Section 8.7.4.

24 Front Boulevard Width Dimension

Ref: 8.4.6

Finding: The front boulevard between curb and sidewalk is dimensioned as 1.85m softscape. Section 8.4.6 requires a minimum front boulevard width of 2.0m (preferred > 2.0m) for residential streets, though 1.2m is permitted under constrained conditions.

Action: Widen front boulevard to minimum 2.0m if right-of-way permits, or confirm constrained residential boulevard width with the City Engineer per Section 8.4.6.

25 Water Service Connections Sizing Compliance

Ref: 3.4.2.2

Finding: Proposed residential water services are dimensioned as 25mm diameter ('25mm WATER SERVICE (TYP.)'), complying with the 25mm minimum size requirement for small diameter service connections under Section 3.4.2.2.

Action: Maintain 25mm service connection diameter conforming to Section 3.4.2.2.

26 Water Service Connections Material Specification

Ref: 3.4.2.2

Finding: The callout '25mm WATER SERVICE (TYP.)' does not specify the pipe material. Section 3.4.2.2 and Section 3.5.3 specify copper as the preferred material for small diameter service connections under 100mm.

Action: Specify copper pipe material for all 25mm service connections in accordance with Section 3.4.2.2 and Section 3.5.3.

27 Sidewalk Cross-fall

Ref: 8.4.3.3

Finding: All 2 sidewalk segment(s) are within the 2% maximum.
• North sidewalk along 'B' Avenue (0+188 to 0+347): 2% (cross-fall from this sheet's typical cross-section)
• South sidewalk along 'B' Avenue (0+188 to 0+347): 2% (cross-fall from this sheet's typical cross-section)
NOTE: the standard states more than one cross-fall — the check uses the LARGEST (2%).

Action: Sidewalk cross-fall meets the 2% requirement.

28 Back Boulevard Width Dimension

Ref: 8.4.6

Finding: The back boulevard between the concrete sidewalk and property line is dimensioned as 0.50m. Section 8.4.6 specifies a minimum back boulevard width of 1.2m (preferred 1.5m) for residential streets, though a constrained minimum of 0.3m is allowable.

Action: Confirm back boulevard width meets constrained residential criteria or adjust layout to achieve 1.2m minimum back boulevard per Section 8.4.6.

29 Curb Ramp Upper Landing Area Dimensions

Ref: 8.8.1.1

Finding: The upper landing area at curb ramps C1 and C2 is constrained by the 1.50m sidewalk width and 0.50m back boulevard. Section 8.8.1.1 requires a minimum landing area of 1.2m (0.9m absolute minimum) clear of obstructions at the top of all curb ramps.

Action: Verify and detail a minimum 1.2m unobstructed planar landing area at the top of each curb ramp per Section 8.8.1.1.

30 Tactile Walking Surface Indicators (TWSI) at Curb Ramps

Ref: 8.4.1.4

Finding: No truncated dome surfaces (TWSI) are specified or detailed on the curb ramps at C1 and C2. Section 8.4.1.4 mandates safety yellow truncated dome surfaces (TWSI) on pedestrian crossings with grade breaks less than 5% between sidewalk and ramp.

Action: Install safety yellow cast iron or composite truncated dome tactile surfaces (TWSI) on all curb ramps in accordance with Section 8.4.1.4 and Standard Detail Drawings C8.5-C8.7.

31 Catchbasin Siting Upstream of Curb Return Compliance

Ref: 5.4.4.1

Finding: Catchbasins CB(65.54) and CB(65.58) are located at station 0+203 immediately adjacent to the curb returns C1 and C2 (0+204.31 / 0+204.48), complying with Section 5.4.4.1 requirement to intercept gutter flows at the beginning of curb returns before crosswalks.

Action: Maintain catchbasin siting at curb returns to intercept gutter runoff prior to intersections per Section 5.4.4.1.

32 Sidewalk Alignment Continuity Compliance

Ref: 8.4.3.2

Finding: Sidewalk alignments run parallel to the property line and road centerline without abrupt bends or jogs, maintaining straight linear continuity in compliance with Section 8.4.3.2.

Action: Maintain straight sidewalk alignment parallel to property lines per Section 8.4.3.2.

33 Isolation Segments

Ref: 3.4.4.1

Finding: All 2 verifiable segment(s) are within the 220m strictest stated maximum (220m) per 3.4.4.1.

Action: Valve spacing meets the stated maximums.

34 Sidewalk Provision on Both Sides Compliance

Ref: 8.4.3.2

Finding: Concrete sidewalks are provided along both the north and south sides of B Avenue across the entire project extent, complying with Section 8.4.3.2 requirement for sidewalks on both sides of urban roadways.

Action: Maintain continuous sidewalks on both sides of B Avenue per Section 8.4.3.2.

35 Horizontal Clearance - Parallel Mains

Ref: 2.2.5

Finding: Proposed 200mm watermain runs parallel to proposed 200mm sanitary sewer from station 0+188.81 to 0+347 at 3.00m centerline spacing (offsets 6.25m and 9.25m), resulting in an edge-to-edge separation of 2.80m, which violates the 3.0m minimum clearance required by Section 2.2.5. Proposed watermain runs parallel to proposed 375mm storm sewer at 4.20m centerline spacing (offsets 6.25m and 10.45m), resulting in 3.91m edge-to-edge separation, which complies with the 3.0m requirement.

Action: Adjust utility alignment offsets to provide a minimum 3.0m edge-to-edge horizontal clearance between the watermain and sanitary sewer main in accordance with Section 2.2.5.

36 Drafting: Title Block and Identification Completeness

Ref: 2.5.10

Finding: The drawing title block contains placeholder text ('MUNICIPAL PROJECT No. xx-xx-xxxx', 'XYZ', 'LOGO', 'PLAN No. XYZ-', 'of XX') omitting official project identifiers, engineer seals, and revision dates required for formal submission under Section 2.5.10.

Action: Populate all title block fields with valid project numbers, engineer seals, professional signatures, drawing numbers, and revision history in compliance with Section 2.5.10.

37 Drafting: Plan and Profile Drawing Scales

Ref: 2.4.1.5

Finding: The title block specifies horizontal scale 1:500 and vertical scale 1:50. Section 2.4.1.5 specifies 1:500 H / 1:50 V for waterworks plan & profile, but requires 1:250 H and 1:10 or 1:25 V for streets/transportation plan and profile drawings.

Action: Confirm with City Engineer whether a dual-discipline sheet at 1:500 H / 1:50 V is acceptable or provide dedicated streets plan and profile drawings at 1:250 H per Section 2.4.1.5.

Sanitary and Storm Sewer, 'B' Avenue east of Street 2

38 Maintenance Hole Barrel Sizing and Benching

Ref: 4.4.3.3

Finding: All proposed maintenance holes (D26, S19, S20, D29, S21, D30, S22, D31) are specified with 1050mm inside diameter precast concrete barrels ('MH 1050ø'), which fully complies with Table 4-5 and Table 5-12 for pipe diameters up to 450mm under Section 4.4.3.3 and Section 5.4.3.3.

Action: Retain the 1050mm precast barrel sizing as designed per Table 4-5 of Section 4.4.3.3.

39 Sanitary Pipe Cover

Ref: 4.4.2.3

Finding: All 3 sanitary pipe segments meet the 1m minimum cover in the below segments.

- S19 to S20: 3.84m
- S20 to S21: 3.84m
- S21 to S22: 3.36m

Action: Cover meets the 1m minimum requirement.

40 Storm Manhole Spacing

Ref: 5.4.3.1

Finding: All 3 verifiable storm manhole interval(s) are within the 183m maximum. Measured from pipe-run lengths (manhole-to-manhole).

Action: Manhole spacing meets the 183m maximum.

41 Storm Pipe Cover

Ref: 5.4.2.3

Finding: All 2 storm pipe segments meet the 1m minimum cover in the below segments.

- D29 to D30: 3.8m
- D30 to D31: 3.33m

Action: Cover meets the 1m minimum requirement.

42 Storm Pipe Cover

Ref: 5.4.2.3

Finding: Cover not verifiable — manual check required for: D26 to D29. (Cover could not be computed deterministically, e.g. at a drop manhole or an unmatched endpoint.)

Action: Manually verify cover against the 1m minimum for these segments.

43 Sanitary Minimum Grade

Ref: 4.4.2.4

Finding: All 3 sanitary run(s) meet the stated minimum grades (0.5% (or 0.6% if servicing a design population under 25), 0.5%, 0.6%).

Action: Grades meet the stated minimums (or need the noted manual verification).

44 Storm Minimum Grade

Ref: 5.4.2.4

Finding: All 3 storm run(s) meet the stated minimum grades (0.5%).

Action: Grades meet the stated minimums (or need the noted manual verification).

45 Drafting: Sewer Profile Annotations

Ref: 2.4.7

Finding: The sewer profile view omits the CCTV bar indicating service wye takeoff locations along the proposed mains, and does not annotate modeled design flow (QD) or full-flow pipe capacity (QF) in cubic metres per second as required by Section 2.4.7.

Action: Add a CCTV bar along the sewer profile showing wye takeoff locations, and annotate design flow (QD) and full-flow pipe capacity (QF) in cubic metres per second in accordance with Section 2.4.7.

46 Sanitary Manhole Spacing

Ref: 4.4.3.1

Finding: All 3 verifiable sanitary manhole interval(s) are within the 183m maximum. Measured from pipe-run lengths (manhole-to-manhole).

Action: Manhole spacing meets the 183m maximum.

47 Gravity Sewer Pipe Sizing and Approved Materials

Ref: 5.4.2.1

Finding: Proposed sanitary mains are 200mm PVC SDR 35 and storm sewer mains are 250mm PVC SDR 35, conforming with approved materials (Table 4-4 and Table 5-10) and minimum main diameters (200mm for sanitary, 250mm for storm) under Section 4.4.2.1 and Section 5.4.2.1.

Action: Maintain specified PVC SDR 35 material and pipe diameters in conformance with Section 4.4.2.1 and Section 5.4.2.1.

48 Sanitary Manhole S19 Alignment Deflection Drop

Ref: 4.4.3.4

Finding: At sanitary manhole S19 (Stn 0+193), the pipe alignment deflects 90 degrees from east to north, but the provided invert drop across the manhole from inlet (61.19m E) to outlet (61.16m N) is only 30mm (0.03m), violating the mandatory minimum drop requirement of 50mm for alignment deflections between 45° and 90°.

Action: Lower the outgoing north invert at manhole S19 to 61.14m or higher the incoming east invert to achieve a minimum invert drop of 50mm across the 90-degree junction in accordance with Section 4.4.3.4.

49 Sanitary Sewer Velocity and Scour Limits

Ref: 4.4.2.4

Finding: All proposed 200mm PVC SDR 35 sanitary sewer segments (slopes 3.67%, 6.70%, and 3.70%) achieve full-flow velocities of 2.00 m/s, 2.70 m/s, and 2.01 m/s (calculated via Manning's equation, n=0.013), strictly satisfying the preferred minimum cleansing velocity of 0.76 m/s (absolute minimum 0.61 m/s) and remaining well below the 4.6 m/s maximum scour velocity limit under Section 4.4.2.4.

Action: Maintain the proposed sanitary sewer diameters and slopes as designed, which comply with velocity criteria in Section 4.4.2.4.

50 Storm Sewer Velocity and Scour Limits

Ref: 5.4.2.4

Finding: All proposed 250mm PVC SDR 35 storm sewer segments (slopes 0.70%, 6.50%, and 3.70%) achieve full-flow velocities between 1.01 m/s and 3.09 m/s (via Manning's equation, n=0.013), satisfying the preferred minimum cleansing velocity of 0.76 m/s (absolute minimum 0.61 m/s) and remaining comfortably below the 4.6 m/s maximum scour threshold under Section 5.4.2.4.

Action: Maintain the proposed storm sewer slopes and sizes as designed, satisfying Section 5.4.2.4 velocity standards.

51 Minimum Building Elevation (MBE) Clearance

Ref: 5.6.7

Finding: The Minimum Building Elevation (MBE) established on all 28 lots (ranging from 63.35m to 69.30m) provides a vertical safety buffer of 0.70m to 1.60m above the proposed service connection inverts at property lines, fully compliant with the minimum 0.6m elevation margin required under Section 5.6.7.

Action: Maintain the established Minimum Building Elevations (MBE) as specified to ensure gravity flood protection under Section 5.6.7.

52 Road Sag Catchbasin Configuration

Ref: S11.1

Finding: The road centerline and gutter profile create a localized sag / low point near Station 0+204 (CB rim elevations 65.54m at Stn 0+204.15 and 65.58m at Stn 0+204.48, compared to 65.71m-65.73m at the Street 2 intersection), but the design proposes single catchbasins rather than mandatory double catchbasins with side inlet (leafcatcher).

Action: Replace the single catchbasins at the road low point with double catchbasins with leafcatcher (side inlet) conforming to Standard Detail Drawing S11.1 as required by Section 5.4.4.1.

53 Horizontal Clearance - Parallel Mains

Ref: 2.2.5

Finding: Proposed 200mm Sanitary Sewer and Proposed 250mm Storm Sewer run parallel along 'B' Avenue from Stn 0+191.81 to Stn 0+332 with stated offsets of 9.25m SAN and 8.05m STM from the south property line (1.20m center-to-center, ~0.96m edge-to-edge); while this exceeds the 0.3m common trench minimum, no explicit horizontal clearance dimension line is annotated on the plan, requiring field verification to ensure clear separation is maintained throughout.

Action: Add an explicit horizontal dimension line between parallel storm and sanitary sewer centerlines/walls verifying at least 0.3m edge-to-edge clearance in common trench per Section 2.2.5.

54 Sanitary and Storm Service Connection Invert Depths

Ref: 4.6.3

Finding: All 28 proposed sanitary and storm service connections along 'B' Avenue exhibit invert depths at the property line ranging from 2.61m to 4.15m below ground (e.g. Lot 38 D=4.15m, Lot 39 D=4.08m, Lot 35 D=3.98m, Lot 34 D=3.81m), which substantially exceed the absolute maximum allowable depth of 2.4m at the property line without documented engineering justification or City Engineer approval.

Action: Redesign service connection profiles or adjust main elevations so that invert depths at the property line do not exceed the absolute maximum depth of 2.4m as per Section 4.6.3 and Section 5.6.3, or submit formal depth exception documentation for City Engineer review.

55 Twinned Service Lateral Separation in Common Trench

Ref: 2.2.5

Finding: Sanitary (100mm) and storm (150mm) service connections to residential lots are dimensioned at 0.27m center-to-center (e.g. 4.18m SAN and 4.45m STM from lot line), yielding an edge-to-edge horizontal clearance of approximately 0.13m, which is less than the mandatory 0.3m minimum horizontal clearance required for utility assets in a common trench under Section 2.2.5.

Action: Increase lateral spacing between storm and sanitary services to provide at least 0.3m clear edge-to-edge separation in common trench excavations as required by Section 2.2.5.

56 Sanitary Service Connection Inspection Chambers

Ref: 4.6.6

Finding: All 28 proposed sanitary service connections terminate at the property line without showing or specifying sanitary inspection chambers (fitted with red lids) located 0.3m outside the property line on the City street side as mandated by Section 4.6.6 and Standard Detail Drawing S7.1.

Action: Add sanitary inspection chambers with red lids 0.3m outside the property line for each proposed service connection conforming to Section 4.6.6 and Standard Detail Drawing S9.1.

57 Sanitary and Storm Service Sizing

Ref: 4.6.2

Finding: Service connections are designated as 100mm diameter for sanitary ('100ø SAN SERVICE (TYP.)') and 150mm diameter for storm ('150ø STM SERVICE (TYP.)'), satisfying the minimum diameter criteria of 100mm for sanitary services under Section 4.6.2 and 150mm for storm services under Section 5.6.2.

Action: Retain the specified 100mm sanitary and 150mm storm service lateral sizing per Section 4.6.2 and Section 5.6.2.

58 Catchbasin Spacing Along Roadway

Ref: 5.4.4.1

Finding: Catchbasins are spaced at 65.00m along the north curb line (Stn 0+204.15 to Stn 0+269.15) and 66.72m along the south curb line (Stn 0+204.48 to Stn 0+271.20), strictly satisfying the permitted spacing criteria of 60m minimum to 150m maximum under Table 5-15 of Section 5.4.4.1.

Action: Retain catchbasin longitudinal spacing within the 60m to 150m design envelope per Section 5.4.4.1.

59 Catchbasin Grate Orientation and Labeling

Ref: 2.4.7

Finding: Proposed catchbasins at Stn 0+204.15, 0+204.48, 0+269.15, and 0+271.20 are labeled with rim elevations and offset positions but lack directional grate orientation identifiers ('CB-L' or 'CB-R') relative to gutter flow direction as required by Section 2.4.7 and Section 5.4.4.4.

Action: Re-label all catchbasins with their directional grate orientation relative to approach gutter flow ('CB-L (rim elev)' or 'CB-R (rim elev)') in compliance with Section 2.4.7 and Section 5.4.4.4.

60 Storm Service Connection Inspection Chambers

Ref: 5.6.6

Finding: All 28 proposed storm service connections terminate at the property line without specifying storm inspection chambers (fitted with green lids) 0.3m outside the property line as required by Section 5.6.6.

Action: Provide storm inspection chambers with green lids 0.3m outside the property line on all storm service connections per Section 5.6.6.

61 Drafting: Survey Benchmark and Monument References

Ref: 2.4.3

Finding: The general notes block displays placeholder 'XYZ' text under the 'BENCHMARK' and 'LEGAL' columns without identifying the specific City of Vancouver survey control monuments, vertical reference datum (CGVD28), or benchmark location/elevation as required by Section 2.4.3 and Section 2.3.5.1.

Action: Replace placeholder 'XYZ' text with active City survey control monument numbers, reference coordinates, datum (CGVD28 / NAD83 CSRS), and benchmark elevations per Section 2.4.3.

62 Drafting: Professional Engineering Seal and Certification

Ref: 2.4.1.4

Finding: The title block seal box contains an uncompleted professional engineer declaration template with blank lines for the engineer's name and exceptions, and completely lacks a BC Professional Engineer seal, signature, date, and firm permit to practice number as required by Section 2.4.1.4.

Action: Affix the required seal, date, and signature of a BC Professional Engineer along with the firm permit to practice number prior to construction issuance in compliance with Section 2.4.1.4.

63 Drafting: Revision Block Documentation

Ref: 2.4.1.4

Finding: The title block revision table is entirely blank, lacking revision numbers, descriptions, dates, and initials of the designer and drafter as required by Section 2.4.1.4.

Action: Populate the revision table with revision numbers, descriptions, dates, and designer/drafter initials per Section 2.4.1.4.

SHEET 2 OF 3 (CONTINUED)

64 Drafting: Drawing Scales

Ref: 2.4.1.5

Finding: The profile vertical scale is designated as 1:50 in the title block and profile grid, whereas Table 2-4 of Section 2.4.1.5 specifies a mandatory vertical scale of 1:100 for standard Storm / Sanitary Plan and Profile drawings (with 1:500 horizontal).

Action: Update the profile vertical scale to 1:100 in conformance with standard metric drawing scales in Table 2-4 of Section 2.4.1.5.

SHEET 3 OF 3 · 21 CHECKS

Pavement Marking and Signage Plan

65 Curbside Statutory Parking Setbacks

Ref: 8.7.7

Finding: Curbside parking lanes on 'C' Avenue (2.4m), 'B' Avenue (2.4m), and 'A' Avenue (2.6m) extend up to intersection curb returns without denoting statutory parking setbacks. Section 8.7.7 mandates a minimum 6.0m parking setback from property lines/crosswalks and 1.5m from lanes/driveways.

Action: Provide a minimum 6.0m statutory 'No Stopping' setback from property lines and crosswalks at intersections per Section 8.7.7.

66 Regulatory Sign Assembly Hierarchy

Ref: 8.10.2

Finding: At intersections along Street 2 and Lane 1, stop signs (RA-1) and street name markers (RD-MK) are co-located on single posts with the RA-1 stop sign positioned at the top. This complies with Section 8.10.2 which requires the most restrictive regulatory sign to be mounted at the top.

Action: Maintain the compliant vertical hierarchy with RA-1 stop signs mounted above street name markers per Section 8.10.2.

67 Raised Pavement Markers (RPMs)

Ref: 8.9.1.1

Finding: Longitudinal lane lines and dividing lines on Street 1 and the avenues lack raised pavement markers. Section 8.9.1.1 requires roadway markings on new asphalt to be supplemented with RPMs spaced every 9.0m.

Action: Specify raised pavement markers (RPMs) spaced every 9.0m along thermoplastic dividing lines and lane lines per Section 8.9.1.1.

68 Stop Bar Setback

Ref: 8.9.1.8

Finding: Stop bars on Street 2 and Lane 1 are aligned flush with curb returns without indicating the required setback. Section 8.9.1.8 requires motor vehicle stop bars to be set back 1.0m clear in advance of crosswalks, or 3.0m from curb returns where no crosswalks exist per Figure 8-4.

Action: Adjust stop bar placement to maintain a minimum 1.0m setback from crosswalk lines or 3.0m from curb returns per Section 8.9.1.8.

69 Traffic Sign Mounting Heights

Ref: 8.10.3

Finding: Mounting heights for proposed regulatory signs (RA-1, RB-51, RB-25, WA-8, WA-36L) are not specified. Section 8.10.3 requires roadside signs to be installed with a minimum height of 2.1m to the bottom of the sign and a maximum height of 3.3m to the top.

Action: Add a general note or detail ensuring roadside signs are mounted with a minimum clearance of 2.1m to the bottom of the sign per Section 8.10.3.

70 Parking Regulation Sign Mounting on Luminaire

Ref: 8.10.3.3

Finding: Callout on Street 1 indicates installing 'NO PARKING' sign (RB-51) on proposed street light pole, adhering to Section 8.10.3.3 allowing parking regulation signs to be mounted on utility/light poles along curbside zones.

Action: Maintain parking sign installation on lighting poles with appropriate mounting brackets per Section 8.10.3.3.

71 Turn Bay Pavement Arrows

Ref: 8.9.1.5

Finding: Dedicated turn bays on Street 1 (3.2m left-turn lane and 3.5m right-turn lane) omit turn arrow pavement markings. Section 8.9.1.5 requires turn arrows installed in thermoplastic conforming to Standard Detail Drawings R8.4 and R8.5.

Action: Provide thermoplastic turn arrows in the left-turn and right-turn bays on Street 1 in accordance with Section 8.9.1.5 and Standard Detail Drawing R8.4.

72 Sign Schedule Inventory

Ref: 2.4.5.3

Finding: The Sign Schedule table on the sheet is blank and unpopulated, with no sign types, MUTCD numbers, or quantities specified. Section 2.4.5.3 requires complete Sign Code Inventory tables detailing sign codes, quantities, and support types.

Action: Populate the Sign Schedule with complete sign codes, MUTCD designations, quantities, and support types per Section 2.4.5.3.

73 Pedestrian Crosswalk Delineation

Ref: 8.9.1.7

Finding: No marked pedestrian crosswalks are delineated across Street 1, Street 2, or the avenues at intersections. Section 8.9.1.7 and Section 8.8.1.7 specify standard zebra crosswalk markings (0.6m bars spaced 0.6m apart) or signalized crosswalk markings to accommodate pedestrian crossings.

Action: Review pedestrian connectivity and provide standard zebra crosswalk markings per Section 8.9.1.7 where pedestrian crossings are established.

74 Painted Median Noses

Ref: 8.9.1.10

Finding: Approach noses of raised medians on Street 1 and 'A' Avenue lack paint treatment callouts. Section 8.9.1.10 requires the approach noses of raised medians to be painted yellow from the tip of the island to 1.0m beyond the tangent point.

Action: Specify yellow paint on the approach noses of raised medians extending from the nose to 1.0m beyond the tangent point per Section 8.9.1.10.

75 Bicycle Lane Stencils and Diamonds

Ref: 8.9.1.13

Finding: The 1.5m painted bike lanes along Street 1 lack bicycle stencils and diamond pavement markings. Section 8.9.1.13 requires bicycle stencils with diamonds (1000mm x 3500mm) spaced at 50m intervals along painted bicycle lanes.

Action: Install standard bicycle stencils with diamonds (1000mm x 3500mm) spaced at 50m intervals along the bicycle lanes per Section 8.9.1.13.

76 Bicycle Intersection Conflict Treatment

Ref: 8.9.1.12

Finding: Bicycle lanes crossing the intersections of Street 1 with 'C' Avenue and 'A' Avenue have no conflict area markings. Section 8.9.1.12 requires green surface treatment (MMA or preformed thermoplastic) and elephant's feet crossbike markings (300mm x 300mm squares with 300mm gaps) through conflict areas.

Action: Apply bicycle green surface treatment and 300mm x 300mm elephant's feet crossbike markings across intersection conflict zones per Section 8.9.1.12 and Drawing R8.9.

77 Pavement Marking Material

Ref: 8.9.1.1

Finding: Pavement marking callout on Street 1 designates 'WHITE SOLID PAINT LINE'. Section 8.9.1.1 requires roadway pavement markings on new asphalt to be installed in thermoplastic rather than paint.

Action: Specify thermoplastic material for all permanent roadway markings on new asphalt in accordance with Section 8.9.1.1.

78 Directional Dividing Line

Ref: 8.9.1.11

Finding: A solid yellow directional dividing line is provided along the centerline of Street 1 separating opposing traffic flows, adhering to Section 8.9.1.11 requirements for multi-lane roadway delineation.

Action: Maintain continuous directional dividing line marking per Section 8.9.1.11.

79 Median Keep Right Sign Siting

Ref: 8.10.3.1

Finding: Keep Right signs (RB-25) on medians on Street 1 and 'A' Avenue do not indicate longitudinal setback dimensions. Section 8.10.3.1 requires Keep Right signs (RB-25) to be located 2.5m from the approach end of traffic islands.

Action: Dimension the placement of RB-25 Keep Right signs at 2.5m from the approach end of median traffic islands per Section 8.10.3.1.

80 Stop Bar Linemarking Width

Ref: 8.9.1.8

Finding: Stop bars on Street 1, Street 2, 'C' Avenue, 'B' Avenue, and Lane 1 are dimensioned as 600mm stop bars. Section 8.9.1.8 and Section 8.9.1.1 mandate that motor vehicle stop bars shall be 0.3m (300mm) wide solid white lines.

Action: Revise stop bar marking widths from 600mm to 0.3m (300mm) solid white lines per Section 8.9.1.8 and Section 8.9.1.1.

81 Object Marker Orientation on Medians

Ref: 8.10.3.2

Finding: Object markers at the approach noses of the medians on Street 1 and 'A' Avenue are called out as WA-36L (pass on left). Because approaching traffic must pass to the right of the median, Section 8.10.3.2 requires WA-36R (slanted down to right) object markers.

Action: Replace WA-36L markers with WA-36R (slanted down to the right) for pass-on-right median approach noses per Section 8.10.3.2.

82 Drafting: Benchmark and Coordinate Reference

Ref: 2.4.1.6

Finding: The LEGAL BENCHMARK box in the title border contains placeholder text ('XYZ') with no reference to City Survey Monument Network datum, geodetic benchmark, or coordinate system. Section 2.4.1.6 requires all drawings to clearly reference ground metric coordinates and datum (NAD83 CSRS, CGVD28).

Action: Provide explicit references to City Survey Control Monuments, horizontal datum NAD83(CSRS), and vertical datum CGVD28 in the benchmark block per Section 2.4.1.6.

83 Drafting: Professional Seal and Revision Table

Ref: 2.4.1.4

Finding: The title block and seal area contain placeholder text ('XYZ'), an unsigned and unsealed engineering certification block, an unpopulated revision table, and missing sheet numbers ('of XX'). Section 2.4.1.4 requires standard title blocks, completed revision blocks, and a valid BC Professional Engineer seal and signature.

Action: Complete the title block with actual project personnel, revision history, sheet numbers, and have the drawing signed and sealed by a BC Professional Engineer per Section 2.4.1.4.

84 Drafting: Drawing Scale

Ref: 2.4.1.5

Finding: The title block specifies a plan scale of HORIZ. 1:500. Table 2-4 in Section 2.4.1.5 requires Signage and Pavement Markings drawings to be prepared at a mandatory metric scale of 1:250 horizontal.

Action: Rescale the signage and pavement markings plan to 1:250 horizontal scale with graphic bar scale per Section 2.4.1.5 and Table 2-4.

85 Drafting: Monochrome Submission

Ref: 2.4.5.4

Finding: The pavement markings and signage plan is presented in black and white line work. Section 2.4.5.4 requires pavement marking plans to be submitted in colour, illustrating line additions, alterations, and eradications per MUTCD.

Action: Submit pavement marking plans in full colour with distinct line color tones per Section 2.4.5.4 and Section 2.4.1.8.